Si4356-RX-434 Standalone Receiver Module Users' Guide

1. Overview

This document describes the basic use of the 4356-RX-434 small standalone receiver module. The schematic of the module is shown in Figure 1.

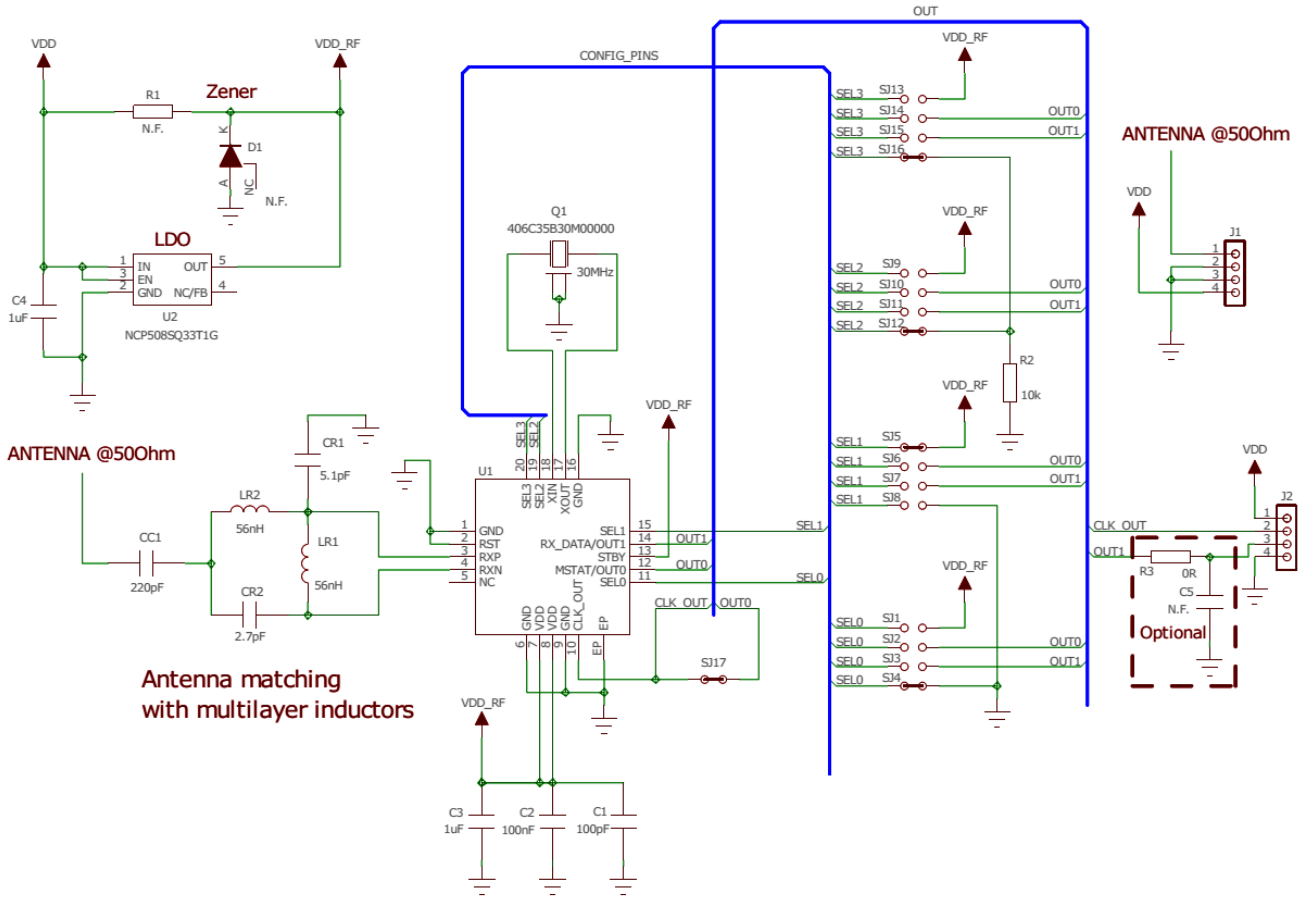

Figure 1. 4356-RX-434 Standalone Receiver Module Schematic

The module contains the Si4356 Standalone Sub-GHz Receiver RF IC, a Zener diode or LDO, a low-cost SMD crystal, and the 4-element discrete matching balun transformer. Because the Si4356 RF IC is pin configurable, the module can operate in RX mode with different configurations. Different carrier frequencies, data rates, modulation types, frequency deviations, and receiver bandwidths can be set by the configuration selector pins (SEL0–SEL3). These pins are connected to GND, VDD_RF, OUT0 (pin 12), or OUT1 (pin 14). The Si4356 provides the received RAW data on pin 14.

The receiver performance can be significantly improved by adding a low-pass filter to the RX data output. These optional RC components are represented by R3 and C5 in Figure 1. Component values have to be calculated based on the expected data rate, where DR=1/(2*pi*R*C). For 2.4 kbps, a good combination could be 1 kΩ with 47 nF. For 1 kbps, use 100 nF.

The element values of the 4-element discrete matching balun transformer depend on the operating frequency. The

 Copyright © 2015 by Silicon Laboratories

element values can be found in the Si4356 data sheet and are detailed in “AN643: Si446x/Si4362 RX LNA Matching”.

The module is +5 V compatible; therefore, supply voltages up to +5 V can be connected to the VDD. Meanwhile, the Si4356 RF IC does not tolerate voltages above +3.6 V (VDD_RF). This voltage conversion between the VDD and VDD_RF (see Figure 1) is ensured by a Zener diode or an LDO; one of them should be mounted simultaneously. Do not directly connect +5 V to the pins of the Si4356 RF IC! The default and typical supply voltage for the VDD is +5 V while using an LDO to drive 3.3 V for the Si4356 RF IC (VDD_RF). If using a Zener diode, the R1 resistor value must be determined according to the Zener diode and the supply voltages.

The RST pin of the Si4356 RF IC on the small RX module is directly connected to the GND, which means that it is not possible to reset the radio chip externally. For this reason, it is strongly recommended to ensure the exact VDD requirements for the radio chip for a proper power-on-reset (POR), as documented in the Si4356 data sheet.

If the documented radio VDD requirements are not carefully followed for a proper POR, and if the VDD_RF is not stable, then it is recommended to place some very large valued capacitors (100 of µF range) on the VDD and VDD_RF lines in order to avoid any unintentional "reset" due to the unstable VDD_RF (and the lack of the proper POR) that could get the radio chip into an undefined state.

2. Module Layout

The layout of the module is shown in Figure 2. The PCB is approximately 11x45 mm.

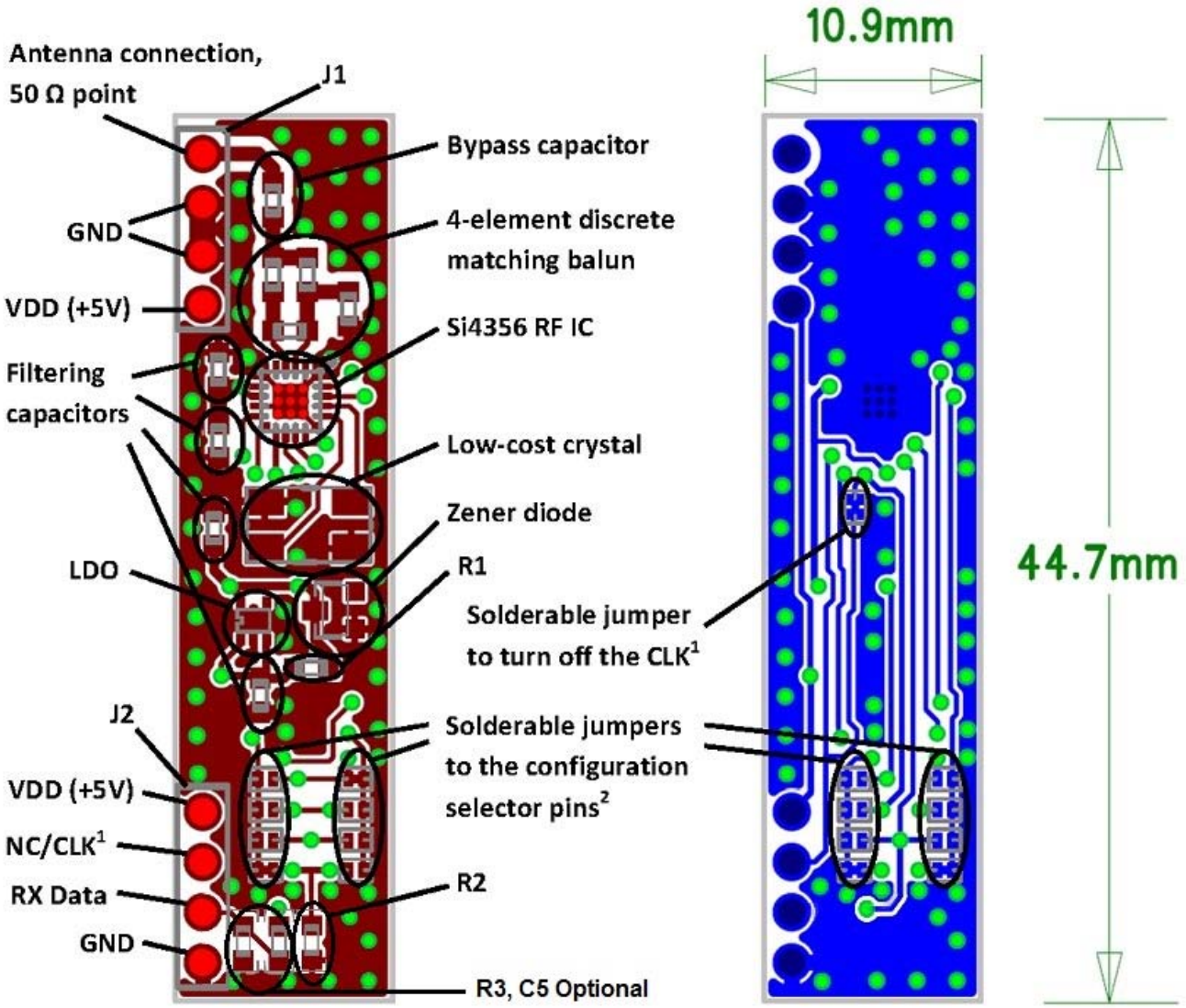

Figure 2. Top and Bottom Layout of 4356-RX-434 Standalone Receiver Module

The module has two 4-pin connectors (see J1 and J2 in Figure 2), and the pin assignments are listed in Table 1.

Table 1. Standalone Receiver Module Pin Assignments

J1		J2	
1	50 Ω point, antenna can be connected through this pin	1	Supply voltage
2	Ground	2	Not connected (default) or CLK
3	Ground	3	Received Data
4	Supply voltage	4	Ground

As the VDD is pulled up to +5 V, the module starts to work in RX mode, and all detectable signals at the selected frequency are demodulated and passed to the system MCU via the RX Data (pin 3 of J2).

The module has a 50 Ω input point (pin 1 of J1) where a monopole type antenna can be connected through pin 1 of the J1 connector.

Notes:

1. A 15 MHz microcontroller clock output is available on pin 10 of the Si4356. This clock signal can be used to drive an external MCU and avoid the need for additional oscillators in the application. If this clock signal is not used, it can be turned off by connecting pin 10 to pin 12. By default, this clock signal is turned off; to make it available on pin 2 of J2, the SJ17 solderable jumper should be cut.
2. Each of the configuration selector pins (SEL0–SEL3) are connected to four solderable jumpers connected to GND, VDD_RF, OUT0, and OUT1. With these solderable jumpers (zoomed in Figure 3), the desired configuration can be set.

Figure 3 shows the solderable jumper connections.

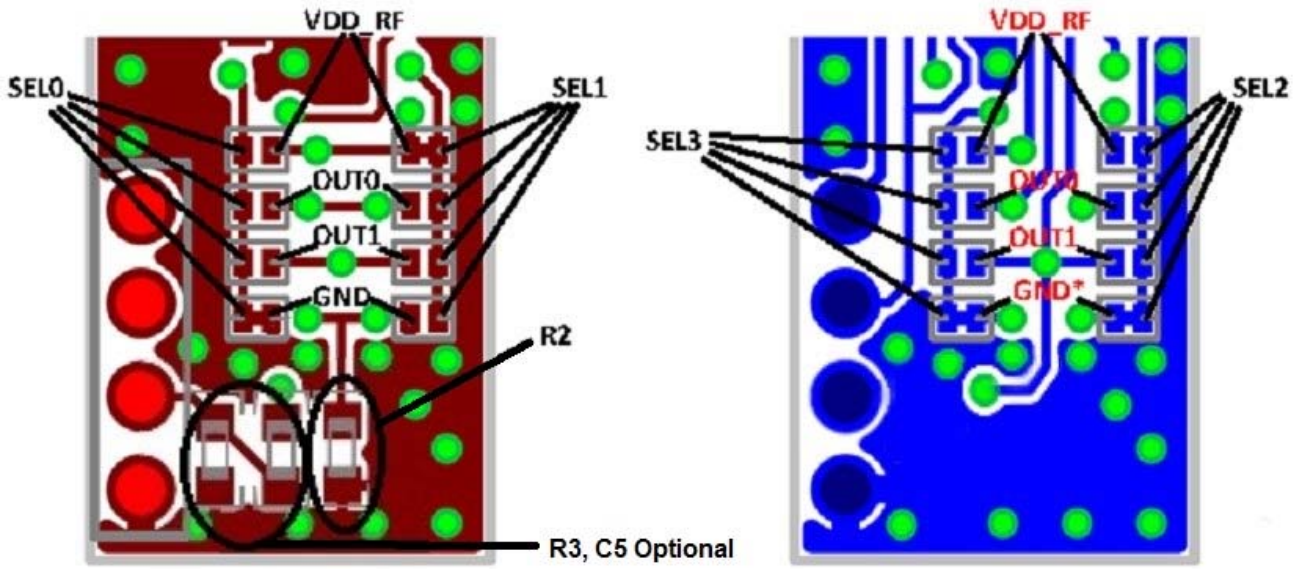

***Note:** These pins of the solderable jumpers are connected to GND through the R2 resistor (10 kΩ) to avoid excess current

Figure 3. Top- and Bottom-Layer Configuration Selector Pin Solderable Jumper Connections

Please refer to the data sheet of the Si4356 RF IC for information on how these solderable jumpers should be connected for all available configurations. The default configuration of the module is as follows:

1. Frequency: 433.92 MHz
2. Modulation Type: OOK
3. Data rate: 0.5–5 kbps
4. RX Bandwidth: 206 kHz

The manufacturing pack, including the CAD, CAM, BOM, and PDF files of the module, can be found on the Silicon Labs home page: www.silabs.com. More detailed information about the Si4356 RF IC can be found in the data sheet.

NOTES:

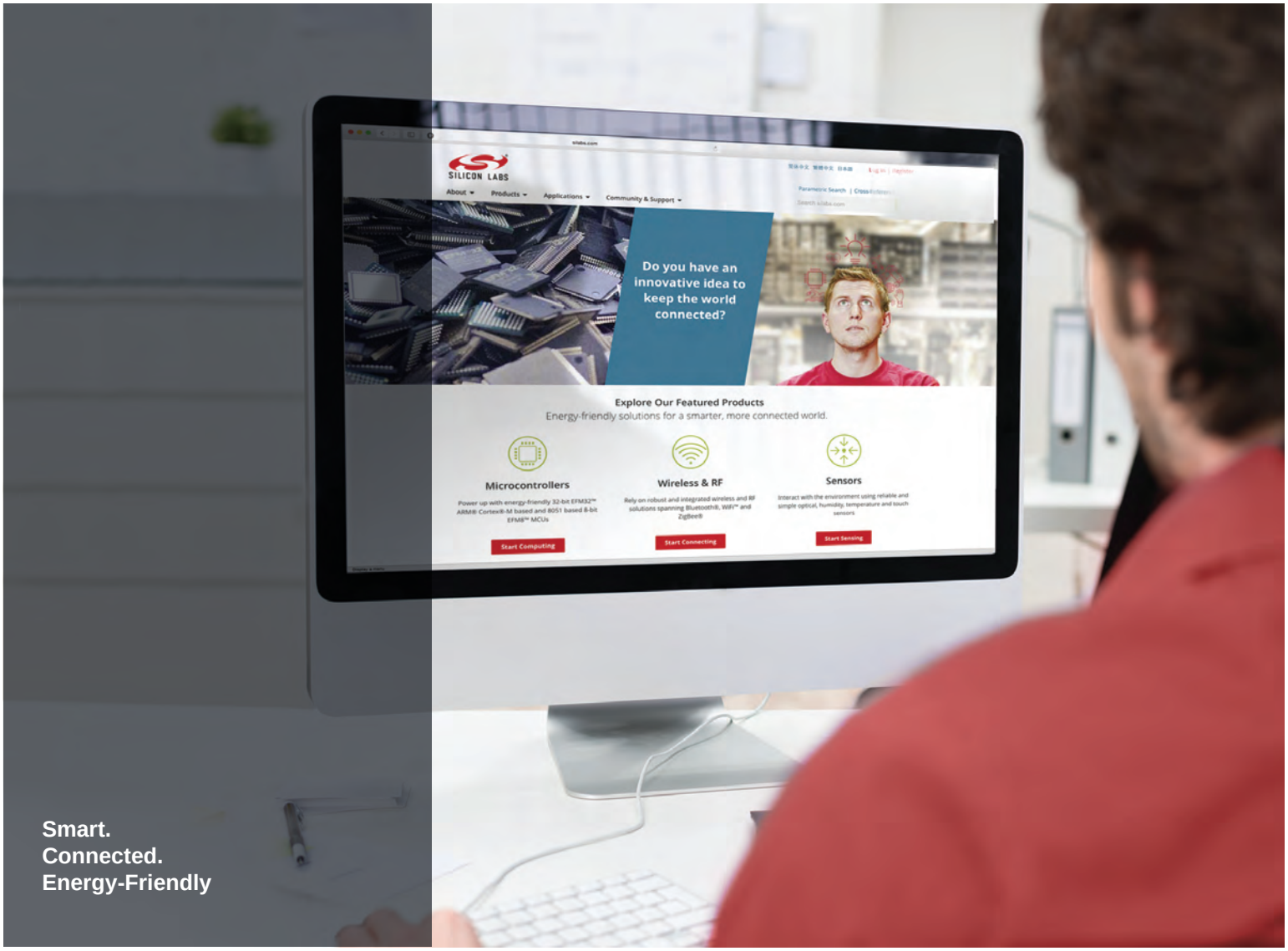

Products
www.silabs.com/products

Quality
www.silabs.com/quality

Support and Community
community.silabs.com

Disclaimer
Silicon Laboratories intends to provide customers with the latest, accurate, and in-depth documentation of all peripherals and modules available for system and software implementers using or intending to use the Silicon Laboratories products. Characterization data, available modules and peripherals, memory sizes and memory addresses refer to each specific device, and "Typical" parameters provided can and do vary in different applications. Application examples described herein are for illustrative purposes only. Silicon Laboratories reserves the right to make changes without further notice and limitation to product information, specifications, and descriptions herein, and does not give warranties as to the accuracy or completeness of the included information. Silicon Laboratories shall have no liability for the consequences of use of the information supplied herein. This document does not imply or express copyright licenses granted hereunder to design or fabricate any integrated circuits. The products must not be used within any Life Support System without the specific written consent of Silicon Laboratories. A "Life Support System" is any product or system intended to support or sustain life and/or health, which, if it fails, can be reasonably expected to result in significant personal injury or death. Silicon Laboratories products are generally not intended for military applications. Silicon Laboratories products shall under no circumstances be used in weapons of mass destruction including (but not limited to) nuclear, biological or chemical weapons, or missiles capable of delivering such weapons.

Trademark Information
Silicon Laboratories Inc., Silicon Laboratories, Silicon Labs, SiLabs and the Silicon Labs logo, CMEMS®, EFM, EFM32, EFR, Energy Micro, Energy Micro logo and combinations thereof, "the world's most energy friendly microcontrollers", Ember®, EZLink®, EZMac®, EZRadio®, EZRadioPRO®, DSPLL®, ISOmodem ®, Precision32®, ProSLIC®, SiPHY®, USBXpress® and others are trademarks or registered trademarks of Silicon Laboratories Inc. ARM, CORTEX, Cortex-M3 and THUMB are trademarks or registered trademarks of ARM Holdings. Keil is a registered trademark of ARM Limited. All other products or brand names mentioned herein are trademarks of their respective holders.

Silicon Laboratories Inc.
400 West Cesar Chavez
Austin, TX 78701
USA

http://www.silabs.com